KALE 135CM

Y5001

WHITE

YÜKLÜK

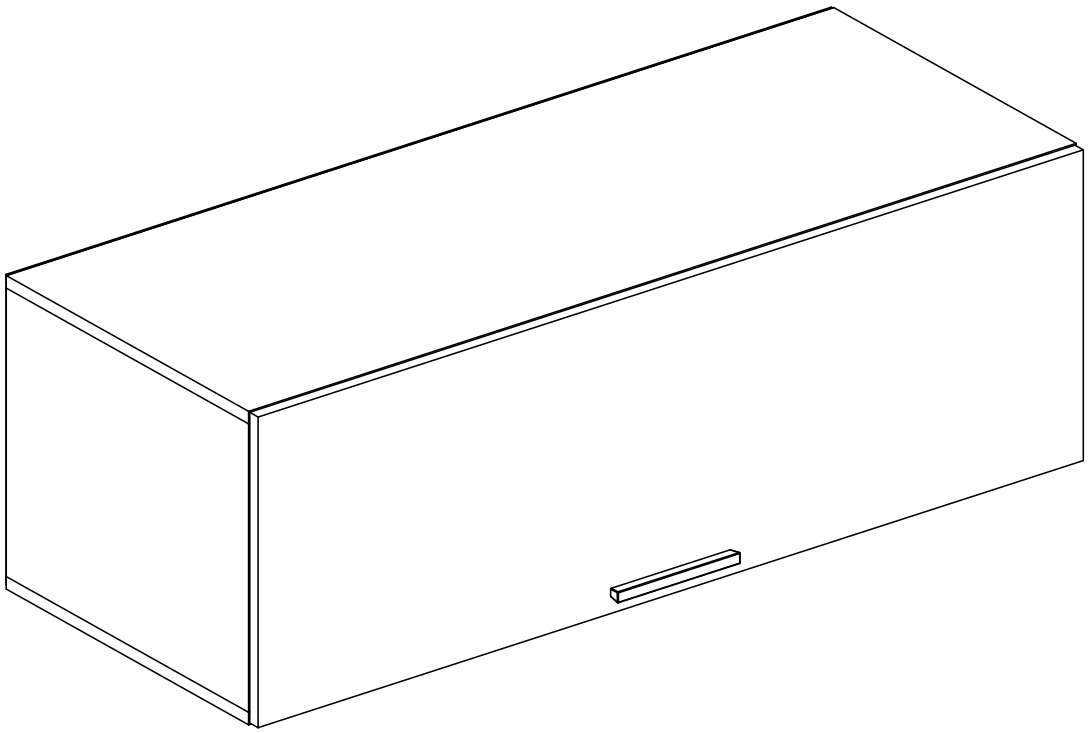

Dear Customer,

We design and produce our products for people to love and have fun with them as we do.
The product you bought was subjected to all sorts of tests and control before sending out to you.



Before start assembling, please check the whole components and accessories according to the lists. If you bought more than one product, to prevent confusion be sure that you completed the first product. Then start the other product's assembling.



Before start assembling, please clean all the components with a damp cloth.
Also for usual cleaning, this will be enough.



Although all the products are produced and packed carefully,sometimes happen that some component is damaged during the transportation. In such a case please check the missing or damaged part and do not hesitate to contact us. You can send e-mail to or reach us at

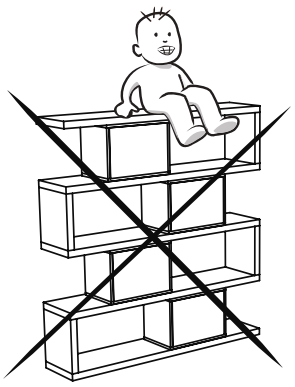

Do not use your furniture for out of purposes.
If you would like to use it, please contact us for further questions.

Do not directly contact your furniture with excessive heat, cold and humidity because the product can be affected..

ATTENTION !!

Minifix is the main connection material used in products. Before starting assembly, please check the drawings below.

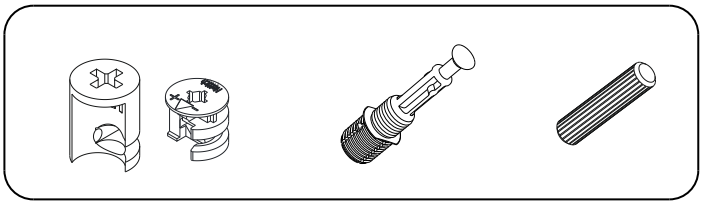

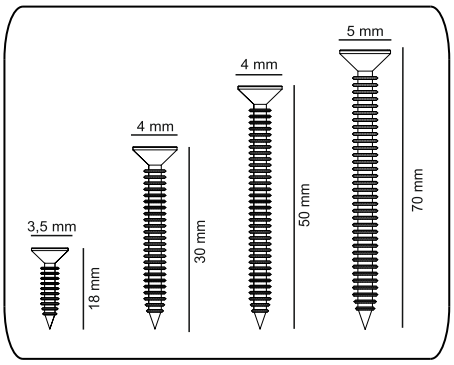

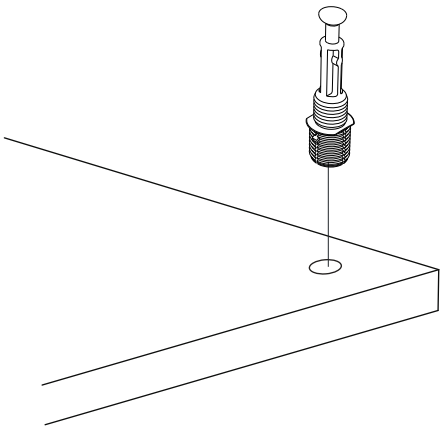

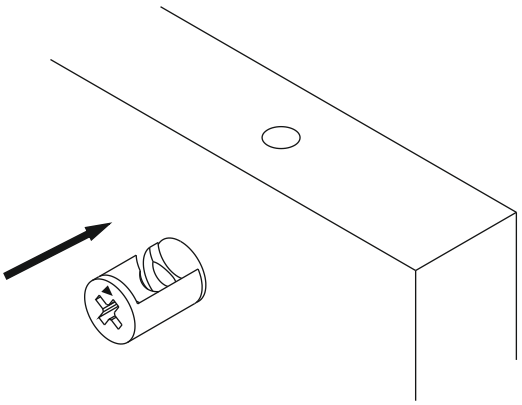

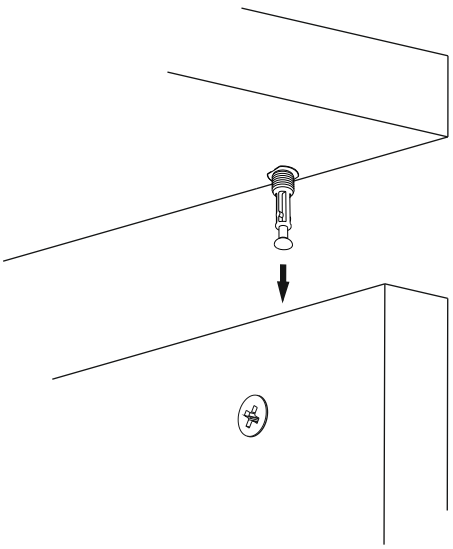

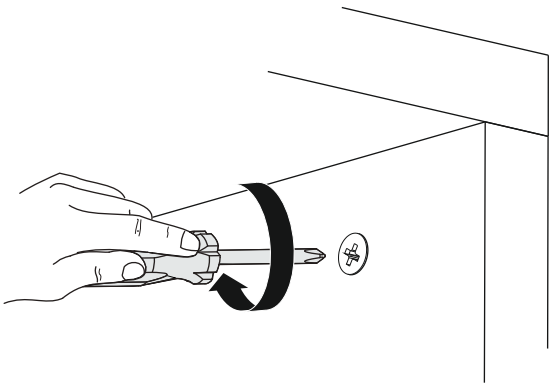

ACCESSORY LIST

BEYAZ - Y5001

KALE YÜKLÜK 135

A23 Minifix M8 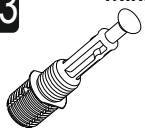 8x	A22 Minifix G18  8x	A04 KVLY 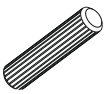 8x	A48 AC 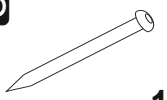 18x	C01 DM 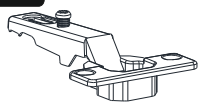 2x
C04 MA 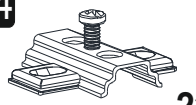 2x	K21 KLP 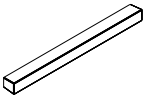 128mm 1x	V33 KLP VD 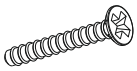 32mm 2x	A18 3,5x18  18x	A41 4x30  4x
A85 PSTN 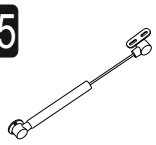 100N 2x	A06 18 mm  BYZ 8x			

GENERAL VIEW

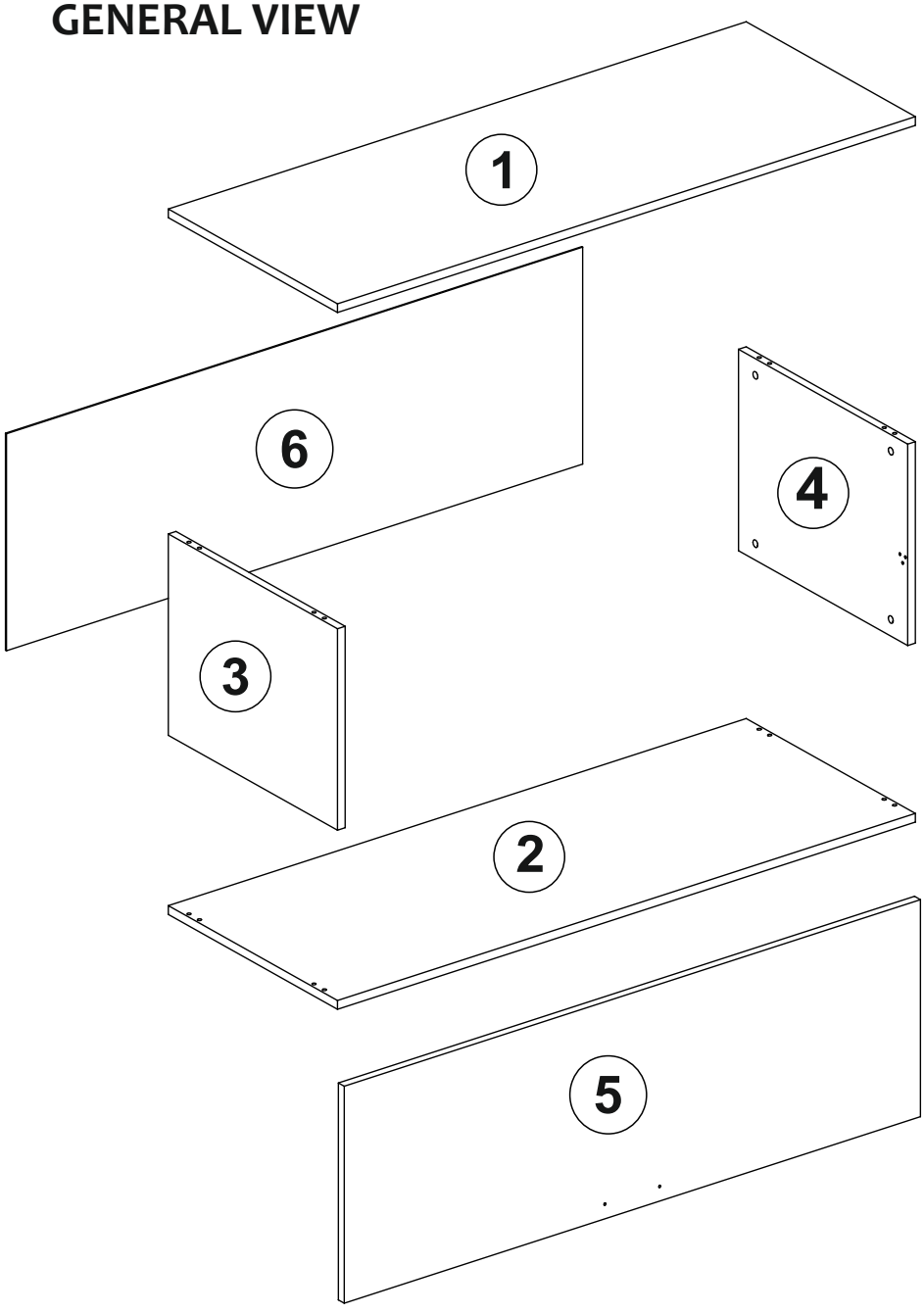

2800.01	1	1350	520	18
2800.02	1	1350	520	18
2800.03	1	414	520	18
2800.04	1	414	520	18
2800.05	1	1346	446	18
2800.06	1	1346	446	3

1

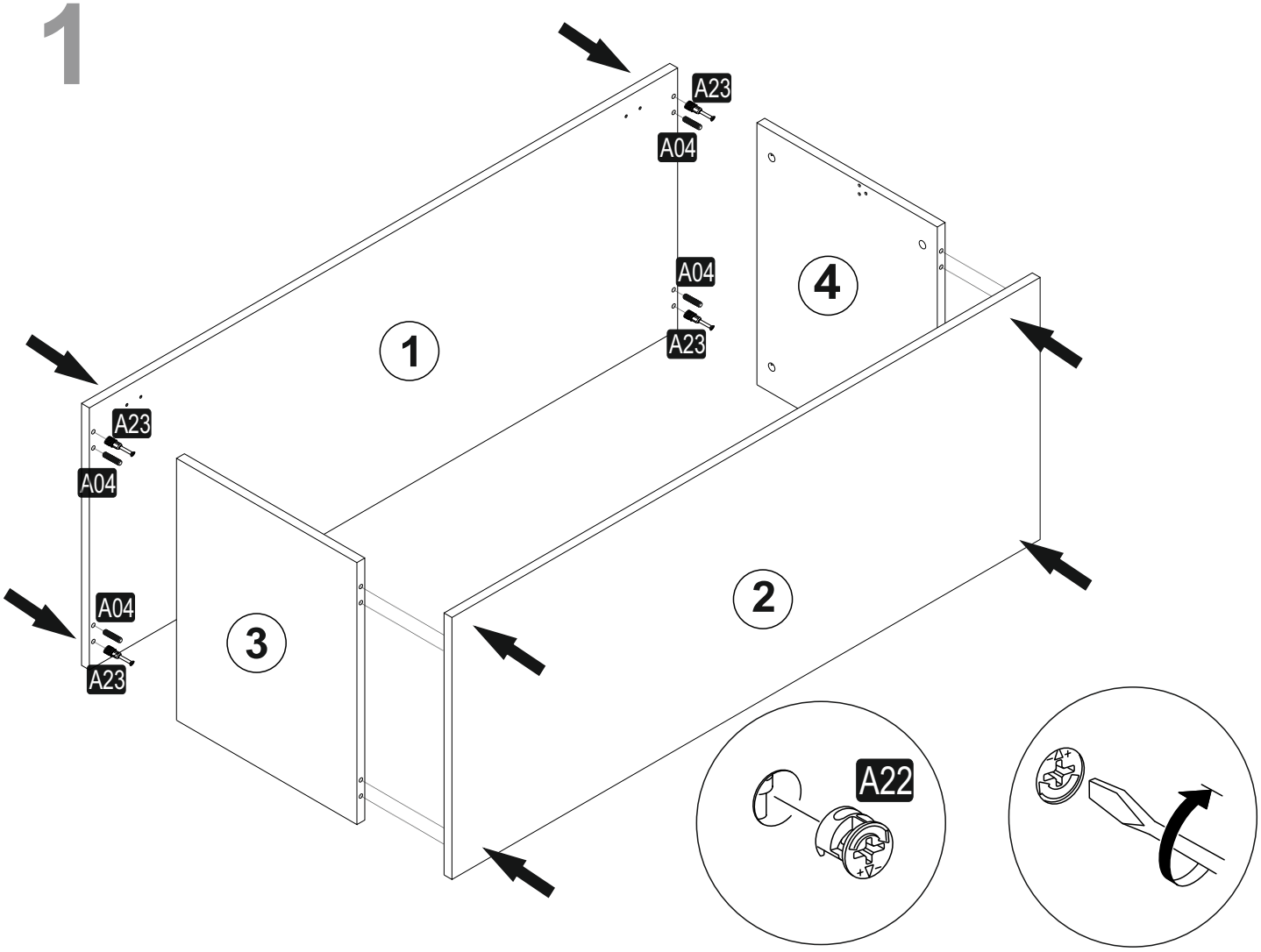

2

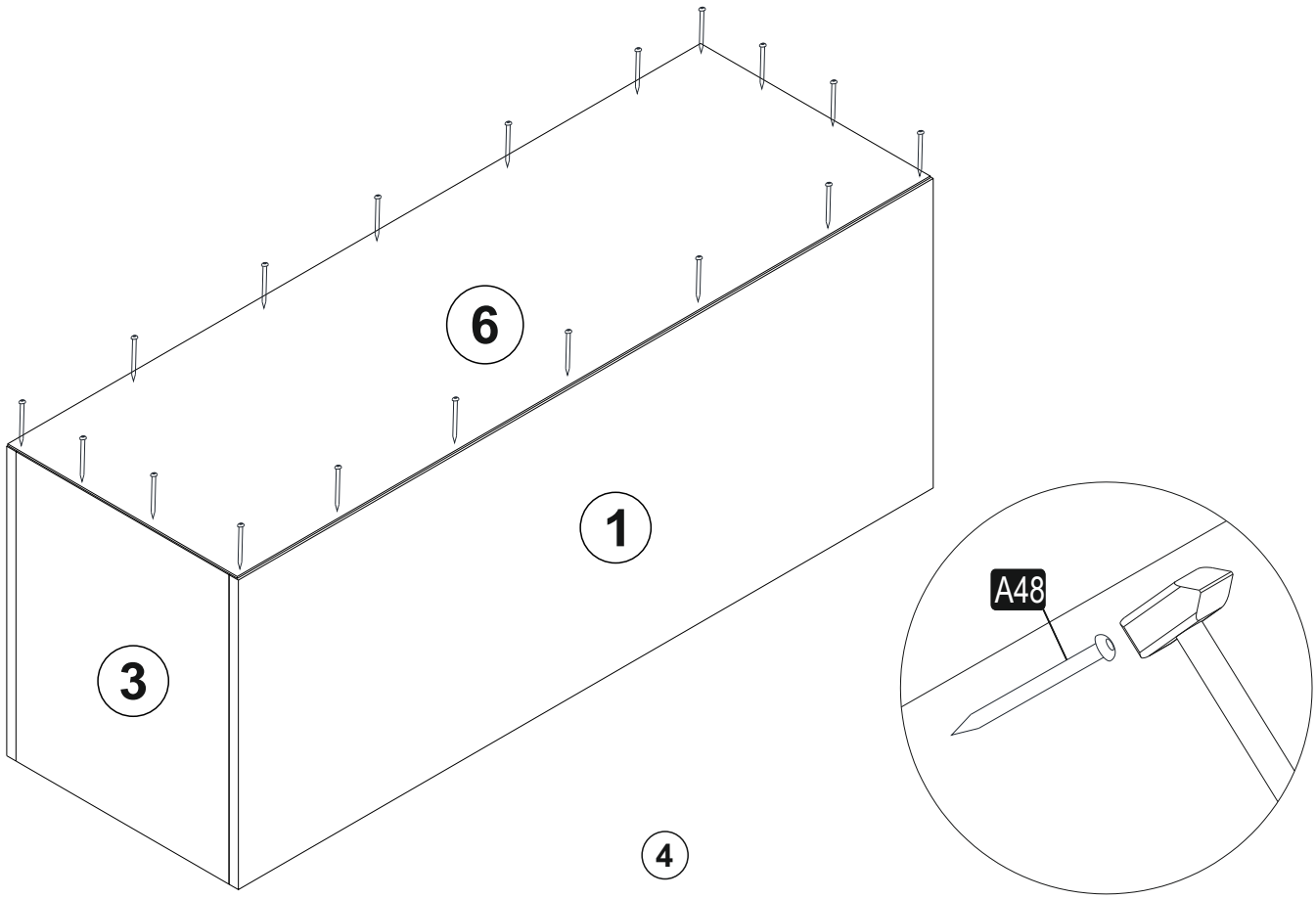

3

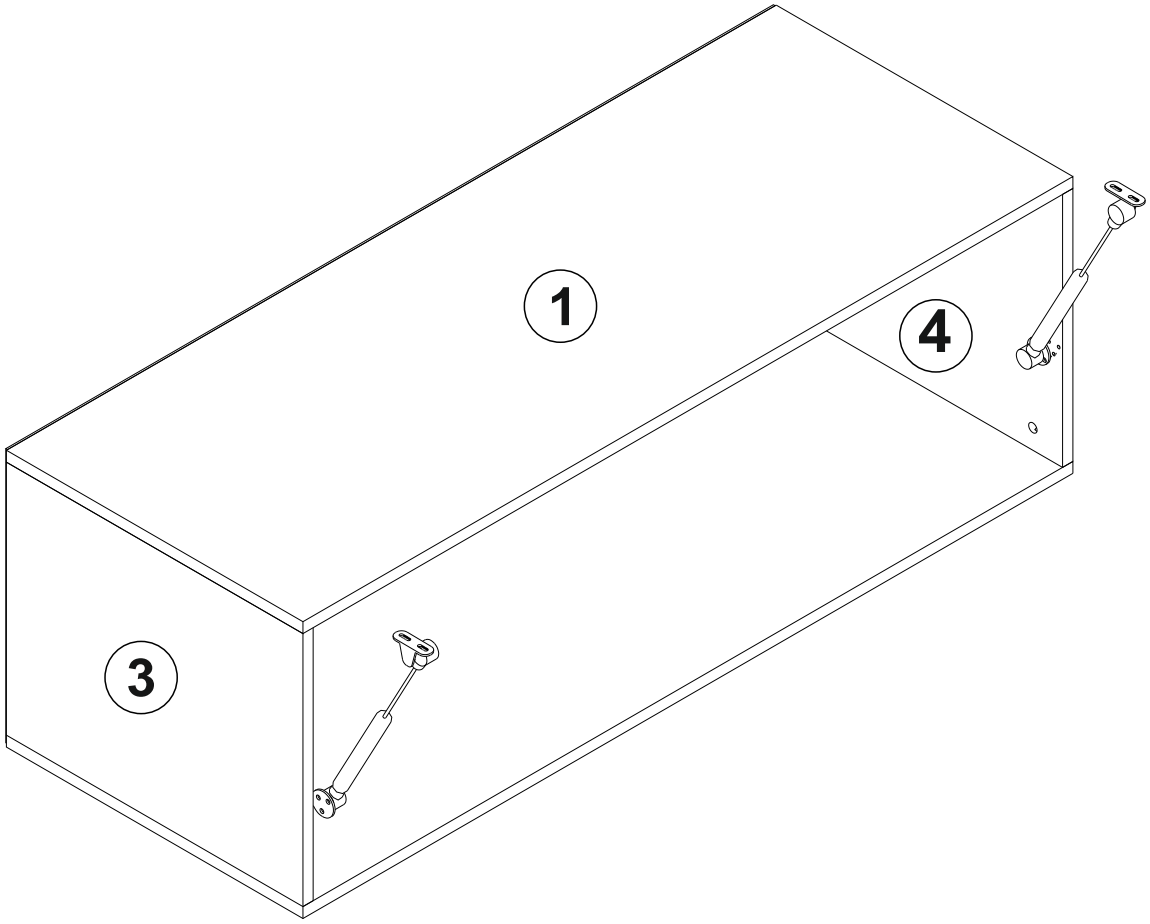

4

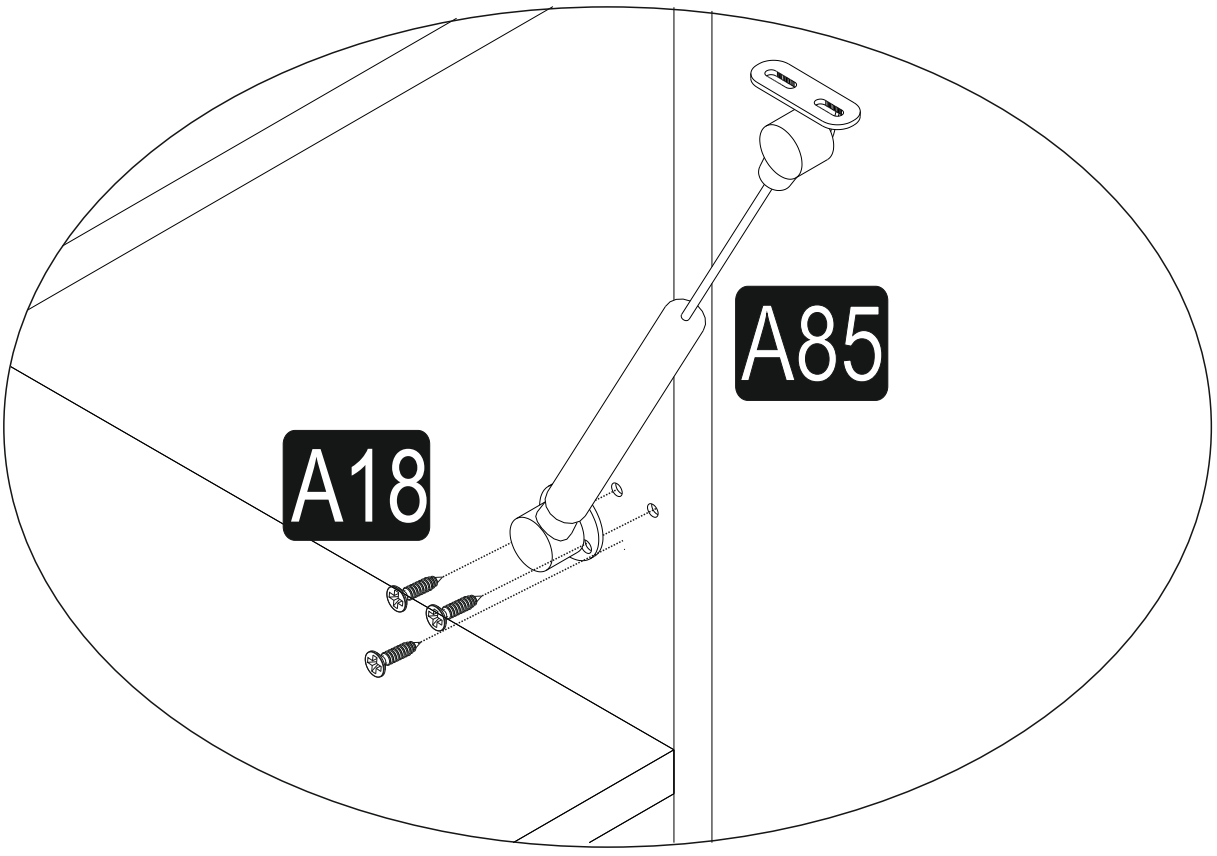

5

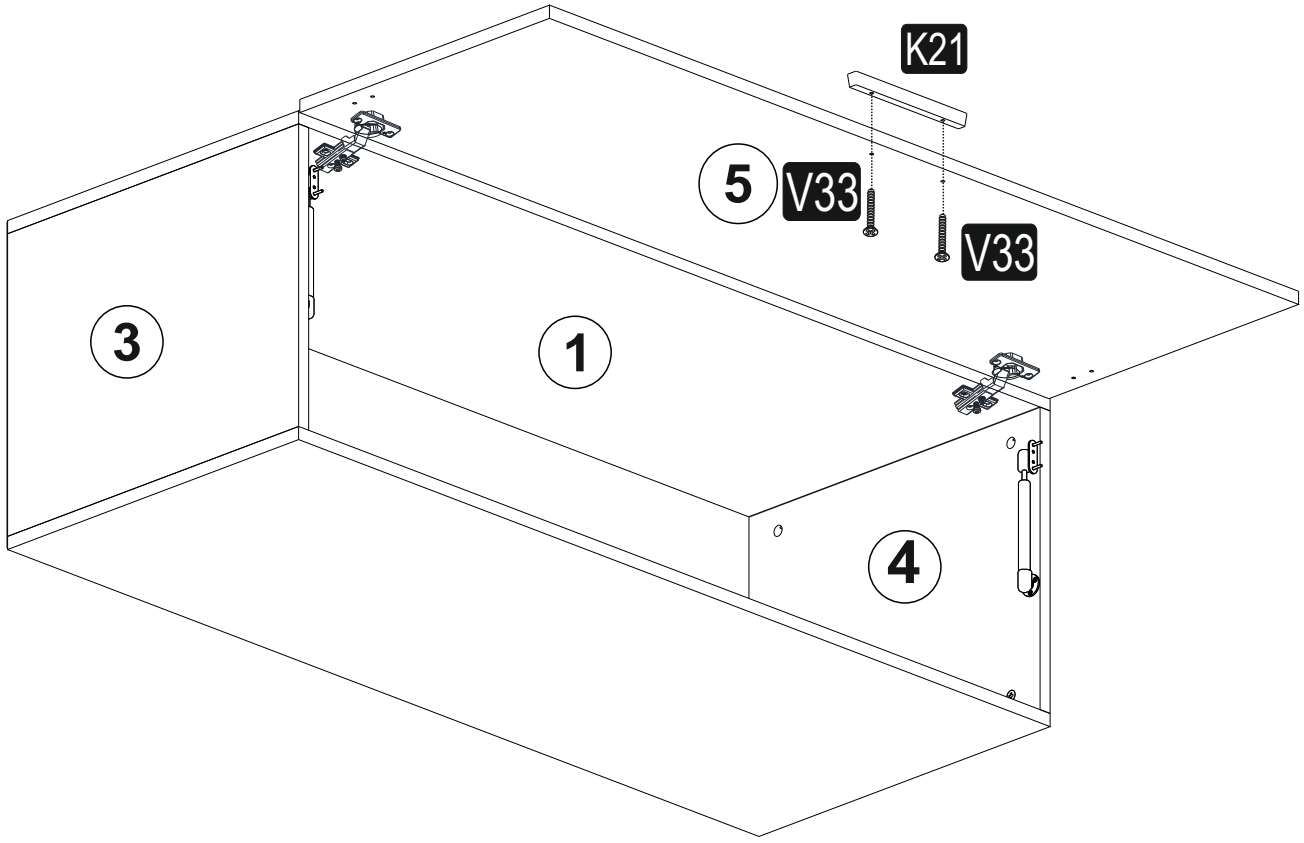

6

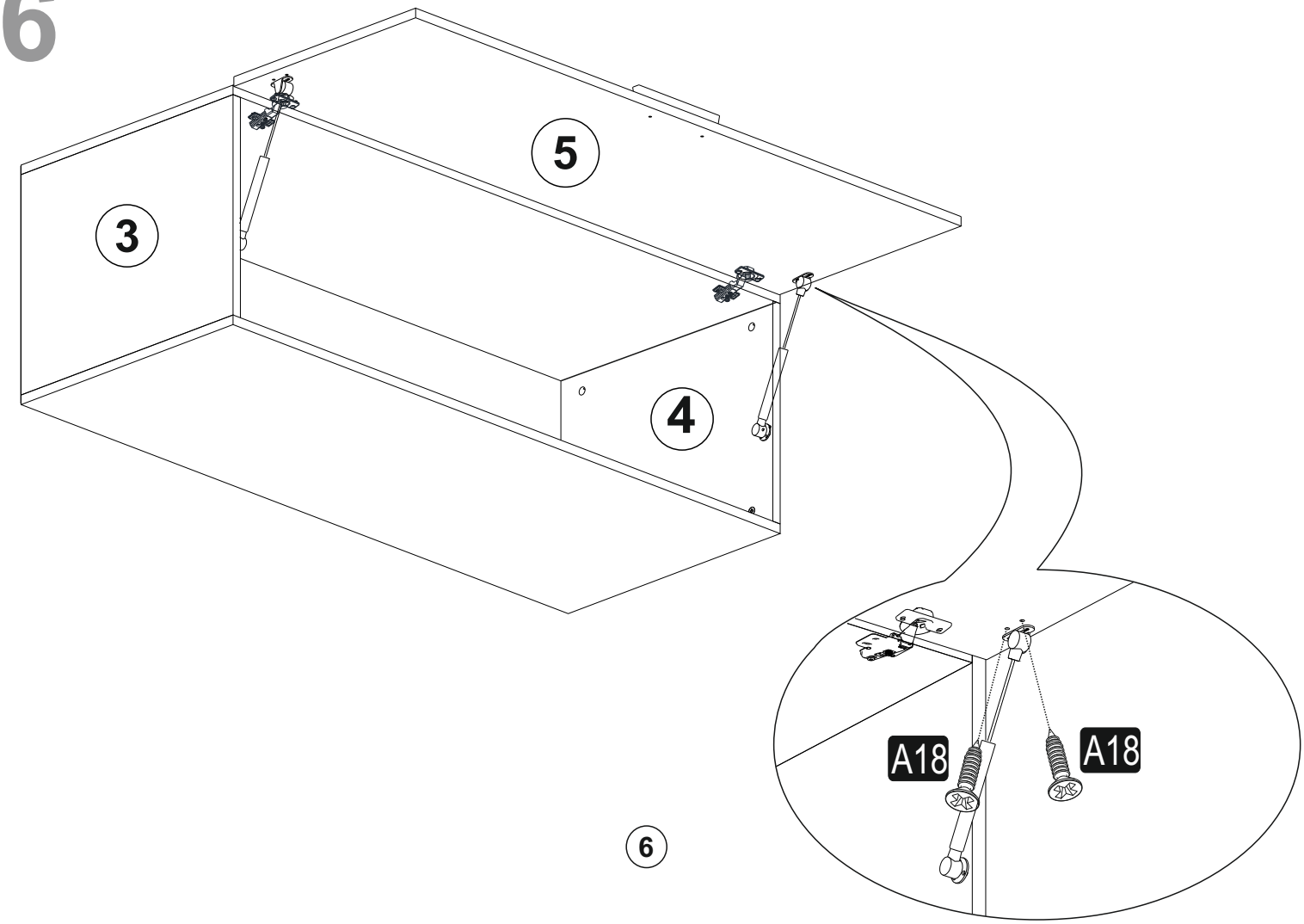

7

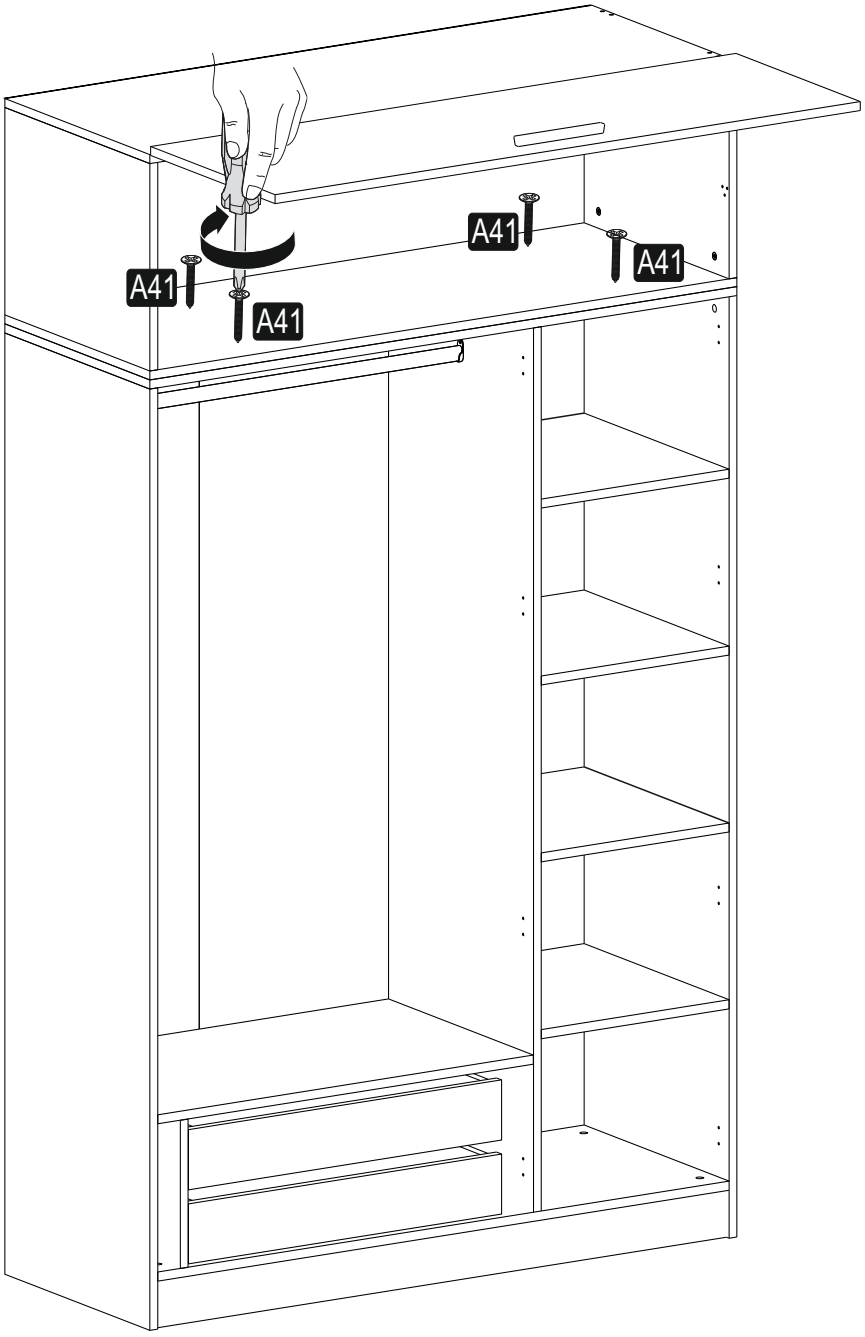

8

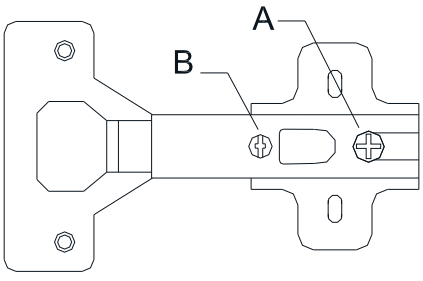

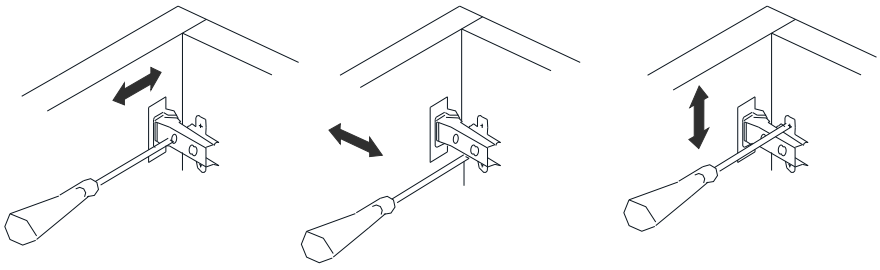

A= menteşe bağlama vidası / to connect the hinge to the door
B = kapak ayar vidası / to arrange the door

oklar kapağın ayarlama yönünü gösterir.
arrows to show the directions for arrangement of doors.

BEYAZ

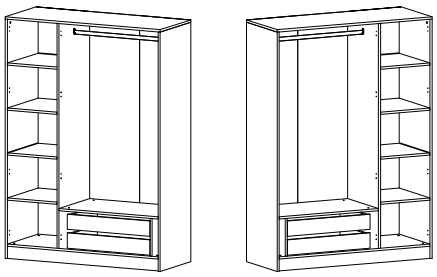

KALE

GÖVDE 3K 190CM+210CM ORTAK

V1

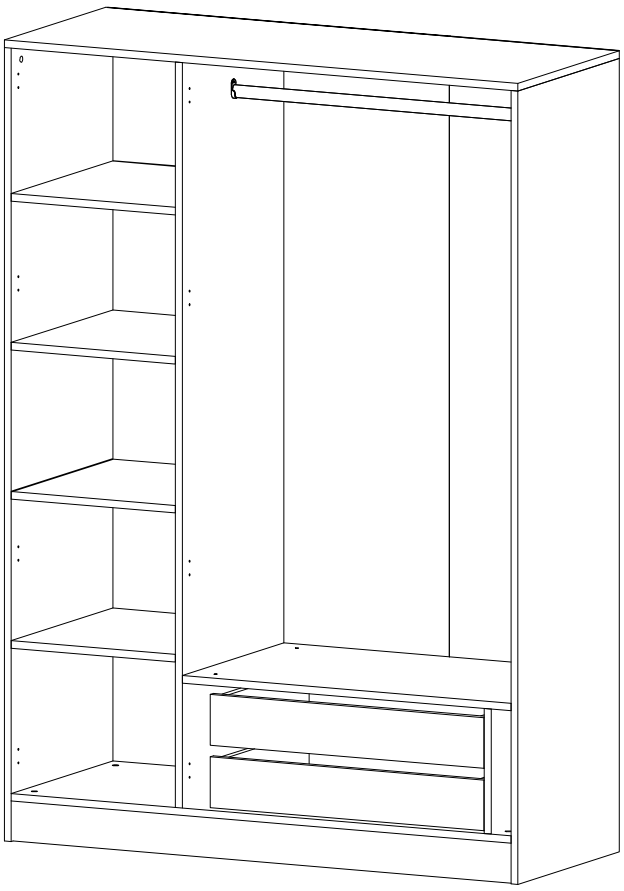

V2

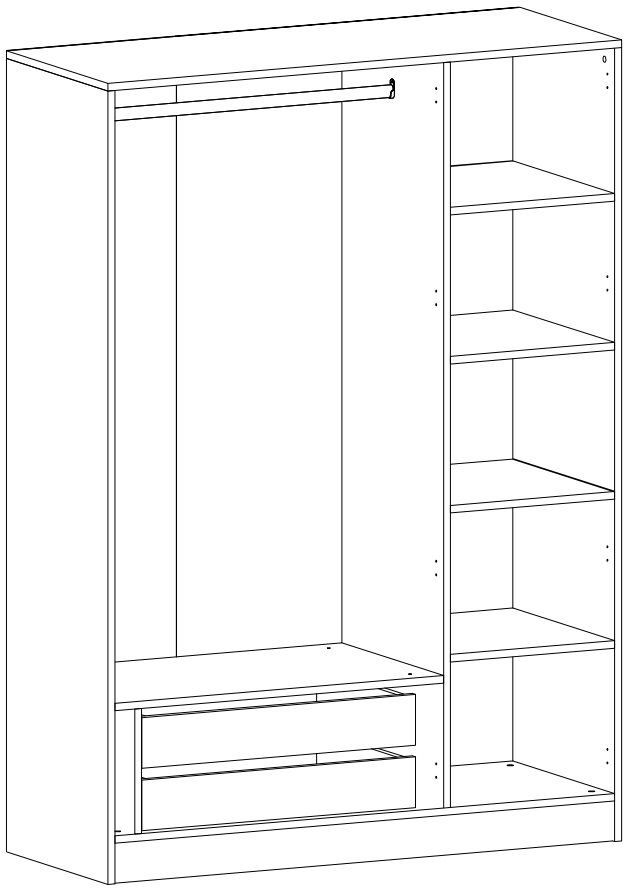

Dear Customer,

We design and produce our products for people to love and have fun with them as we do.
The product you bought was subjected to all sorts of tests and control before sending out to you.

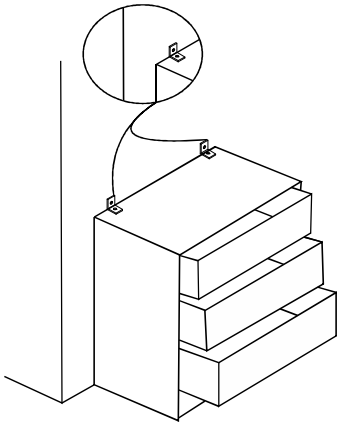

Attention!
Using excessive force to the furniture
can cause furniture to fall
This can damage you both financially and physically.
In order to avoid this situation,please use wall mounting fixtures

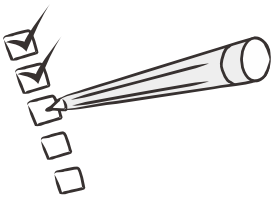

Before start assembling, please check the whole components and accessories according to the lists. If you bought more than one product, to prevent confusion be sure that you completed the first product. Then start the other product's assembling.



Before start assembling, please clean all the components with a damp cloth.
Also for usual cleaning, this will be enough.

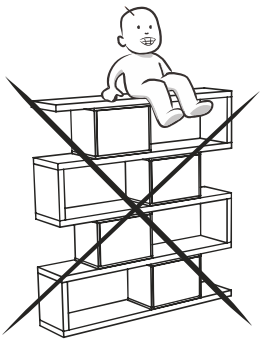

Do not use your furniture for out of purposes.
If you would like to use it, please contact us for further questions.

Do not directly contact your furniture with excessive heat, cold and humidity because the product can be affected..

ACCESSORY LIST

KALE GÖVDE 3K 190+210 BEYAZ

A23 Minifix M10 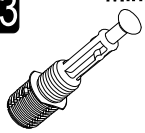 38x	A22 Minifix G18  38x	A06 18 mm  BYZ 28x	A04 KVLY 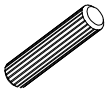 28x	A17 4x50  8x
C01 DM 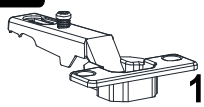 12x	C04 MA 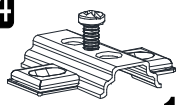 12x	R05 CRY 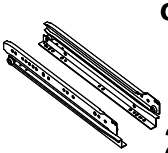 45 cm 2x	A24 FLNS  2x	A55 AB  856 mm 1x
V10 RFX 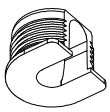 20x14 8x	V11 RFX VD 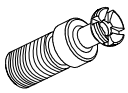 5x13 8x	A18 3,5x18  68x	A48 AC 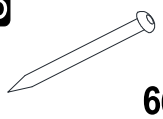 60x	A65 RP 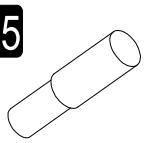 12x
A64 "H"ARKLK CTS 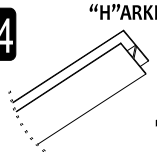 1x	V28 PU.VD  3.5X25 6x			

ÇITA 190 - 1764mm
ÇITA 210 - 1964mm

M.M.01.03.48.05253
Minar Kale 6 Kapaklı 2 Aynalı 4 Ç Dolap
Ve Yüklük Beyaz Antrasit 255CM

Montaj talimatını indirmek için tıklayın

KALE 3		190 LIK		210 LUK		
3	1	1880	520	2080	520	18
4	1	1880	520	2080	520	18
17	1	1800	455	2000	455	3
18	2	1800	443	2000	443	3
5	1	864	520	864	520	18
7	1	1766	520	1966	520	18
8	1	432	520	432	520	18
9	3	432	520	432	520	18
10	1	296	520	296	520	18
11	1	296	520	296	520	18
16	2	698	456	698	456	3
1	1	1350	520	1350	520	18
2	1	1314	520	1314	520	18
6	2	1314	96	1314	96	18
12	2	720	120	720	120	18
13	2	450	96	450	96	18
14	2	450	96	450	96	18
15	2	662	96	662	96	18
19	2	466	96	466	96	18

GENERAL VIEW

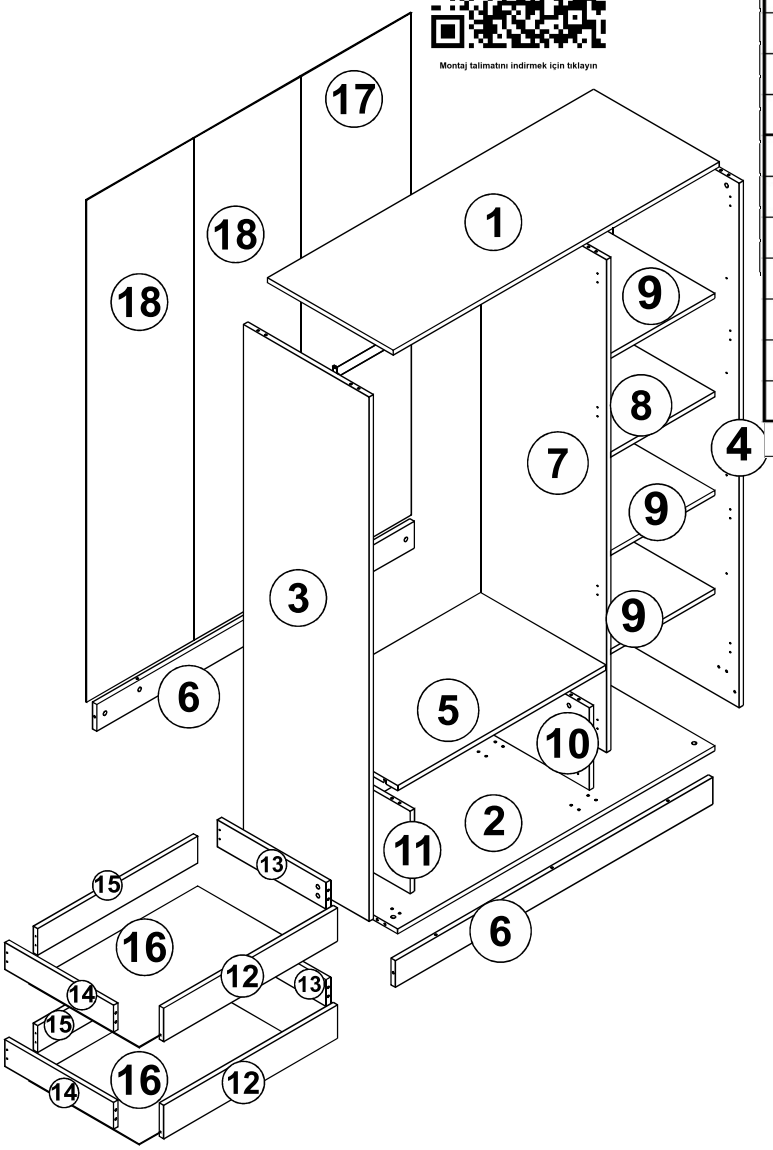

V1

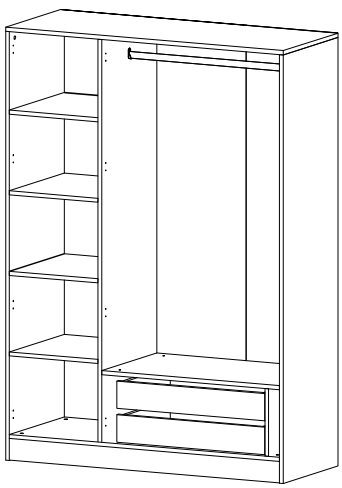

V2

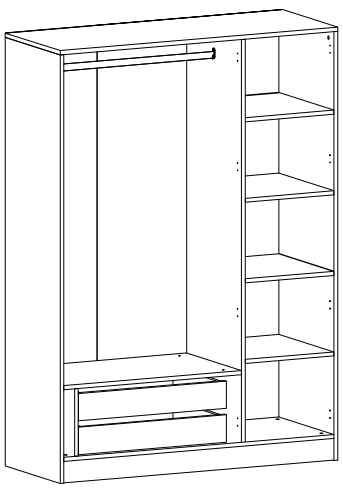

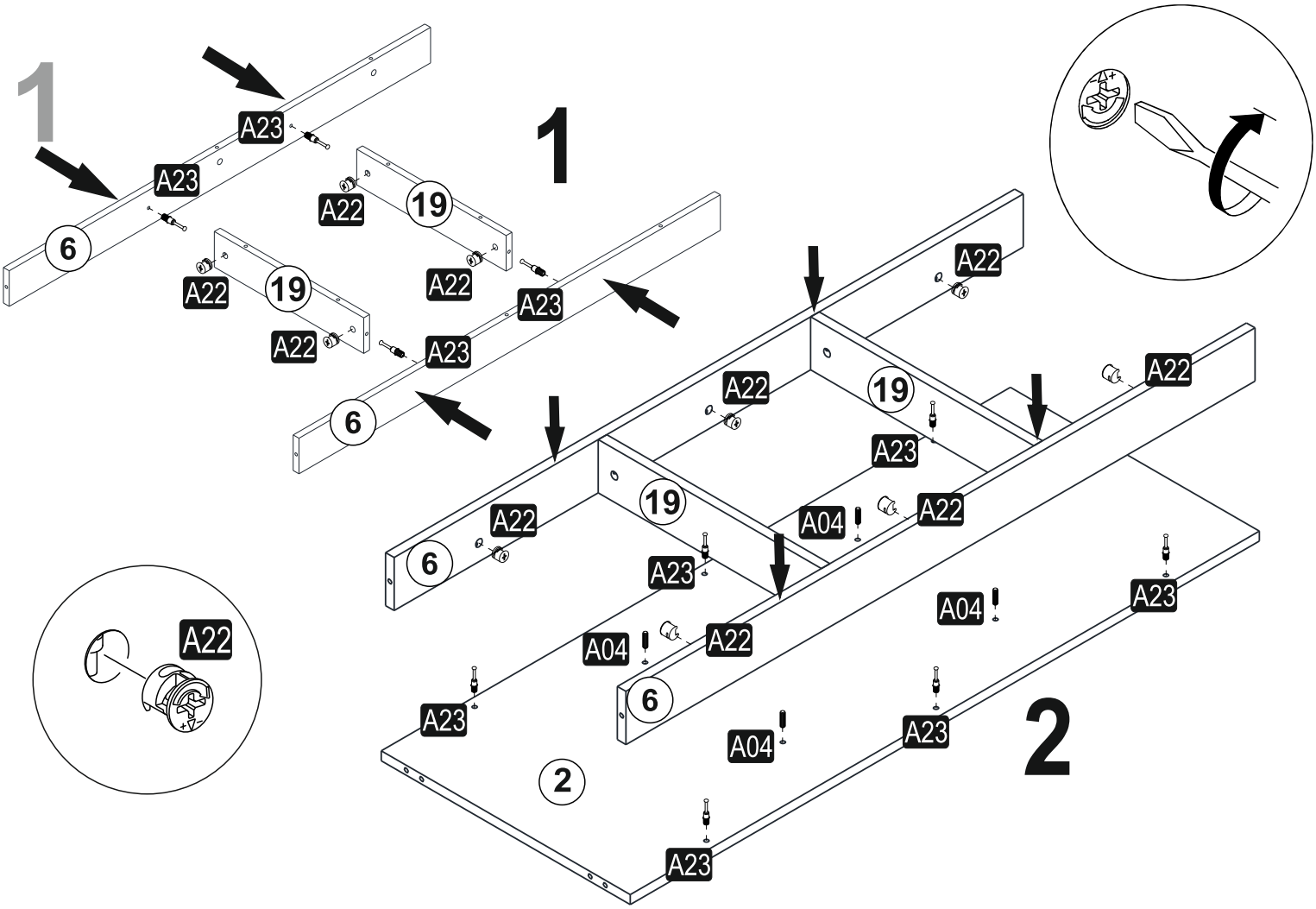
1
A23
A23
6
A22
19
A22
A22
19
A22
A23
A23
6
1
A22
A22
19
A22
A22
A23
19
A04
A22
6
A23
A04
A23
A04
A22
6
A23
A23
A04
2
A23
2

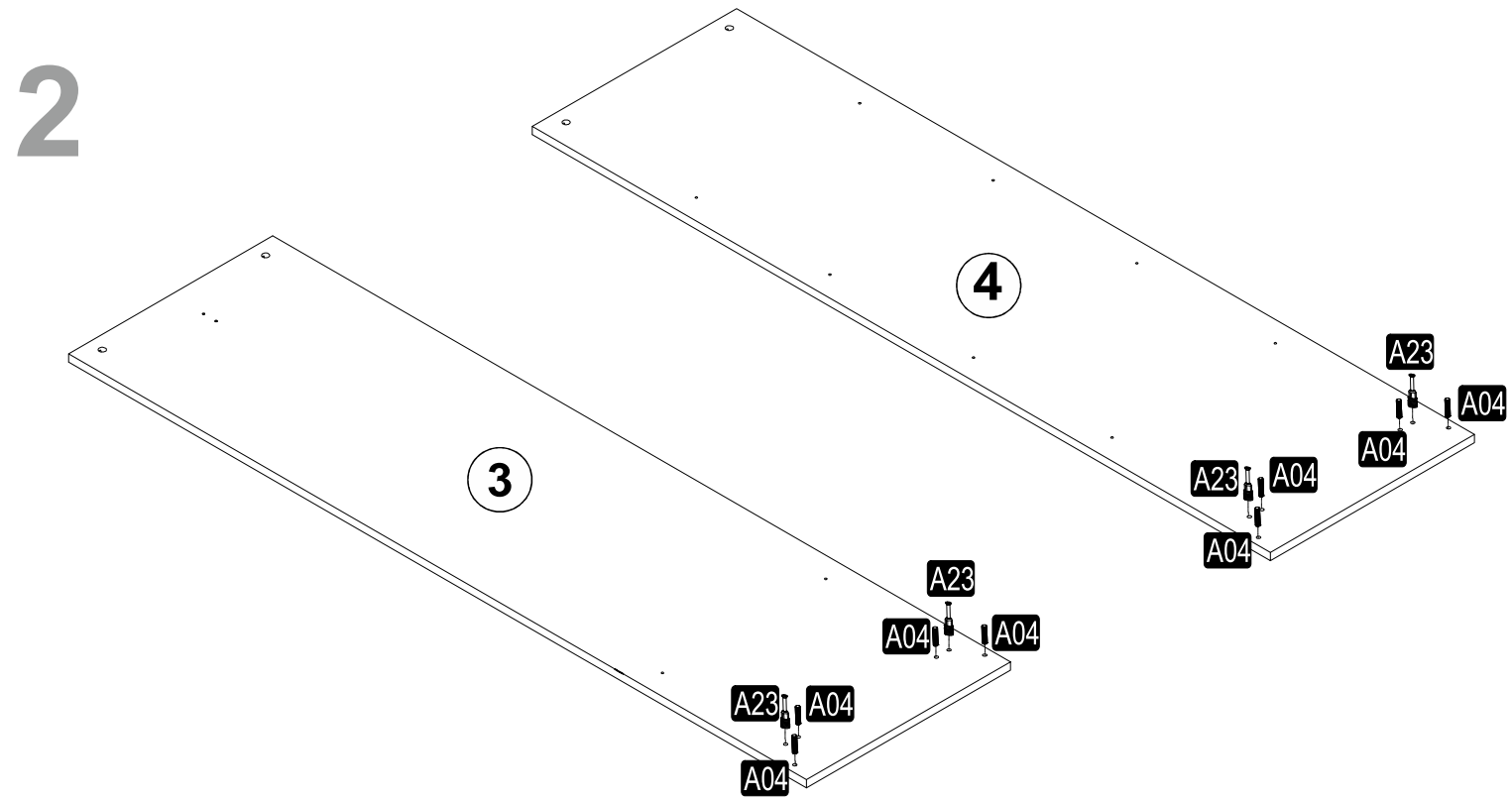
2
4
A23
A04
A04
A23
A04
A04
3
A23
A04
A04
A23
A04
A04

3

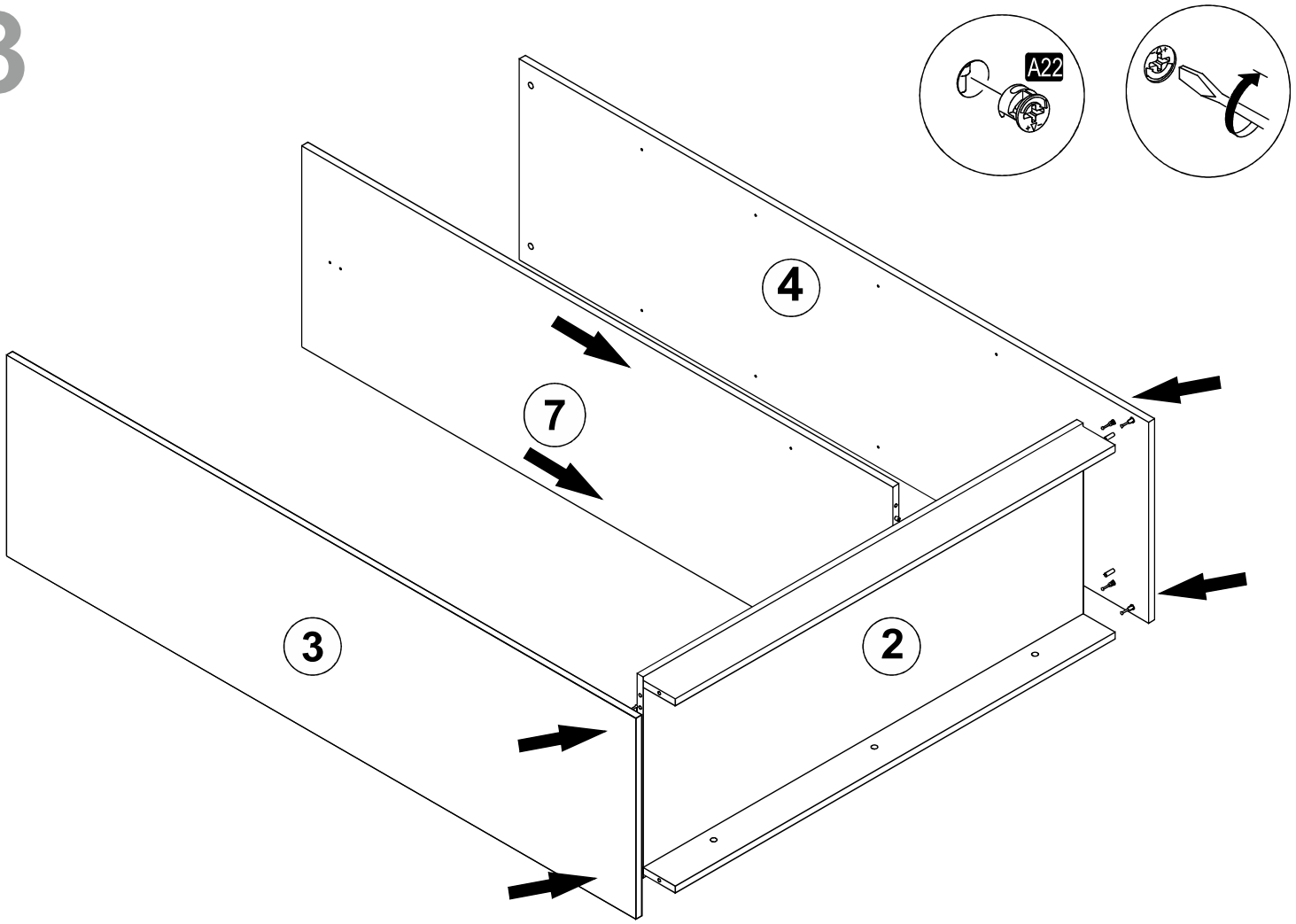

4

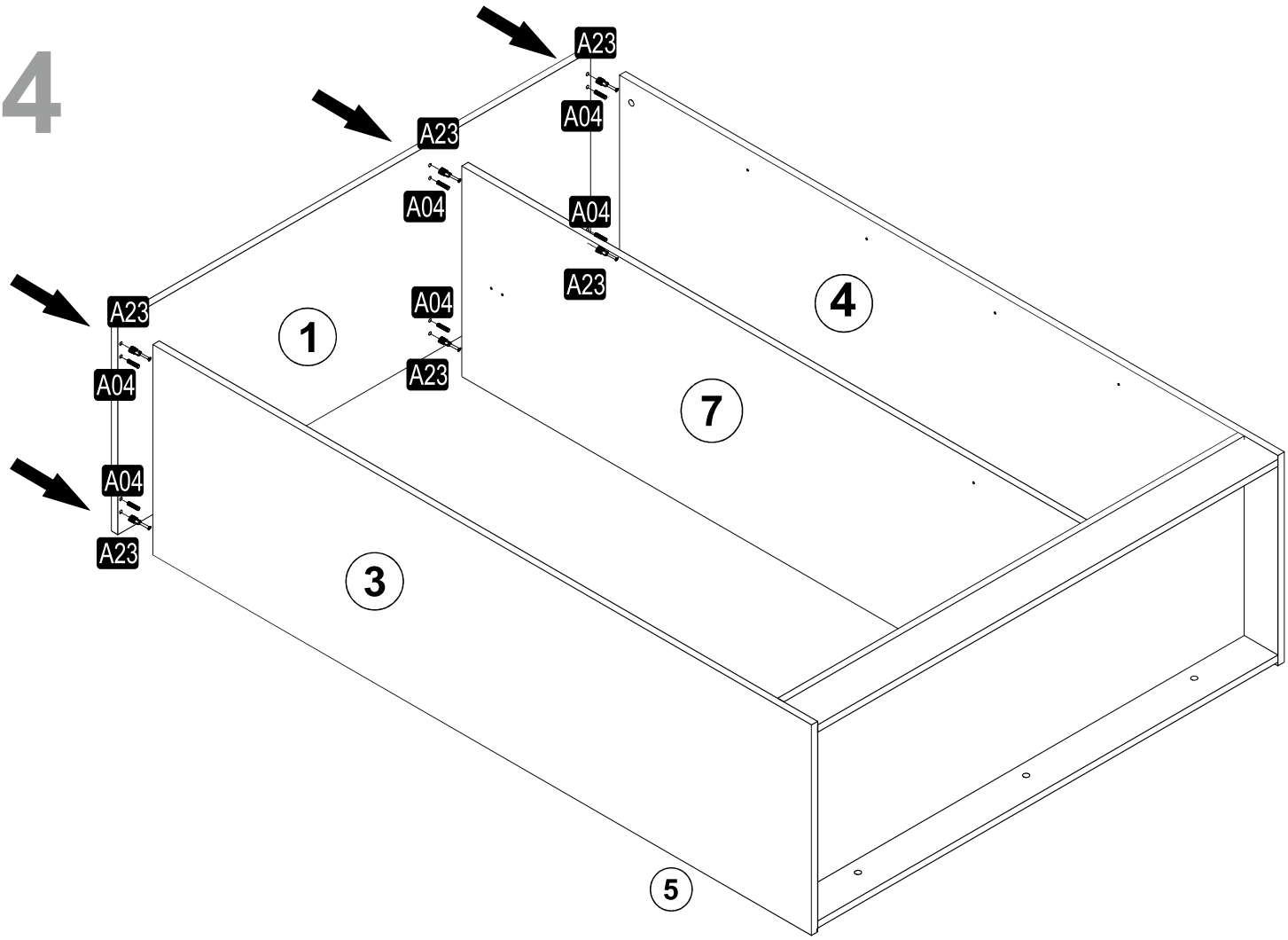

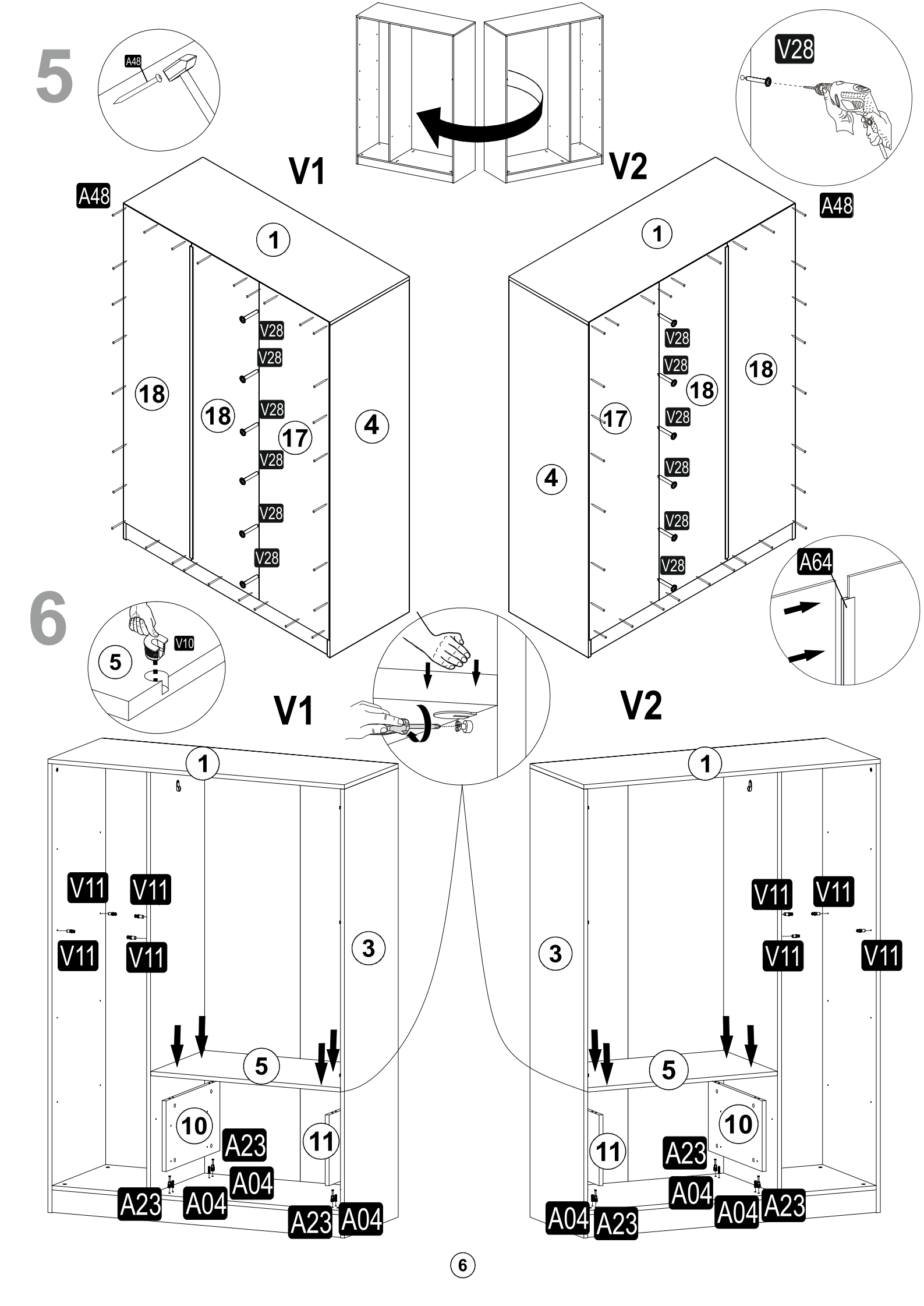
5
A48
V28
V1
V2
A48
A48
1
V28
V28
18
18
V28
17
4
V28
V28
V28
1
V28
V28
18
18
17
V28
4
V28
V28
V28
A64
6
5
V10
V1
V2
1
1
V11
V11
V11
V11
3
3
V11
V11
V11
V11
5
5
10
11
A23
A04
A23
A04
A23
A04
11
10
A23
A04
A04
A04
A23
A23

7

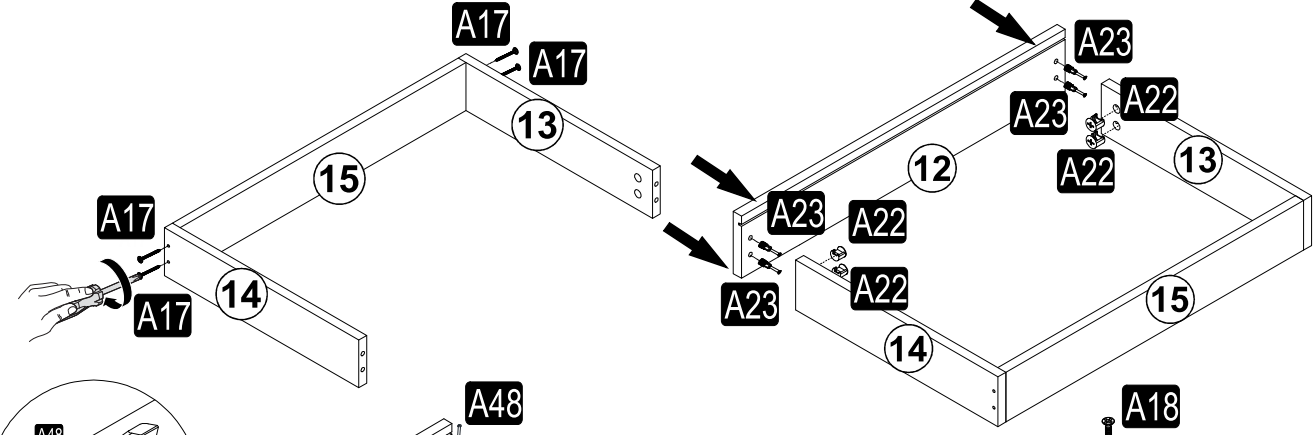
A17
A17
13
15
A17
14
A17
A23
A23
A22
12
A22
13
A23
A22
A22
15
A23
14

8

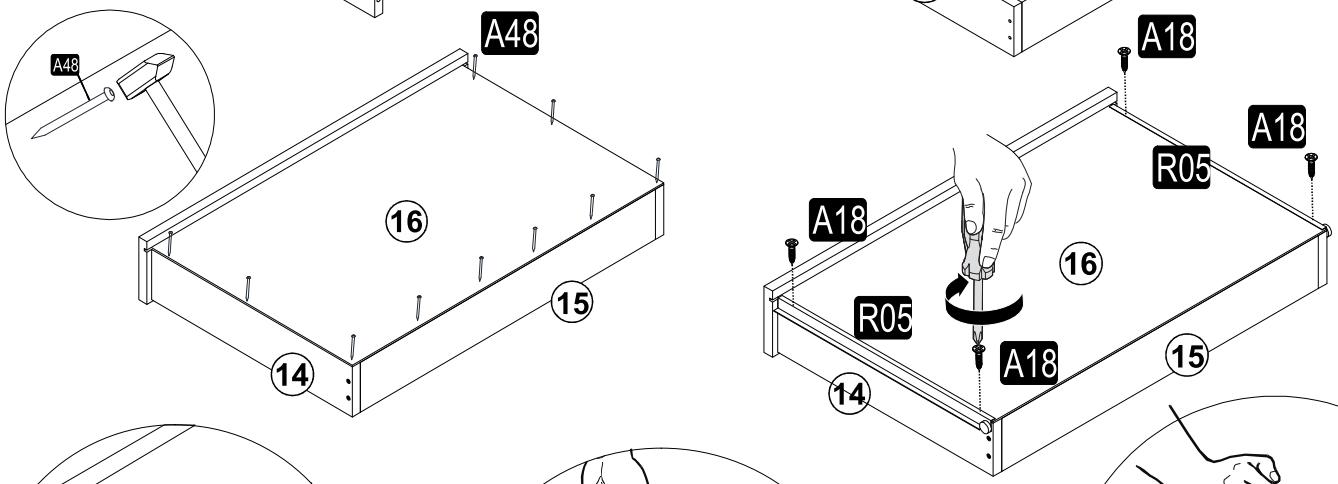
A48
A48
16
15
14
A18
A18
R05
A18
16
R05
A18
15
14

9

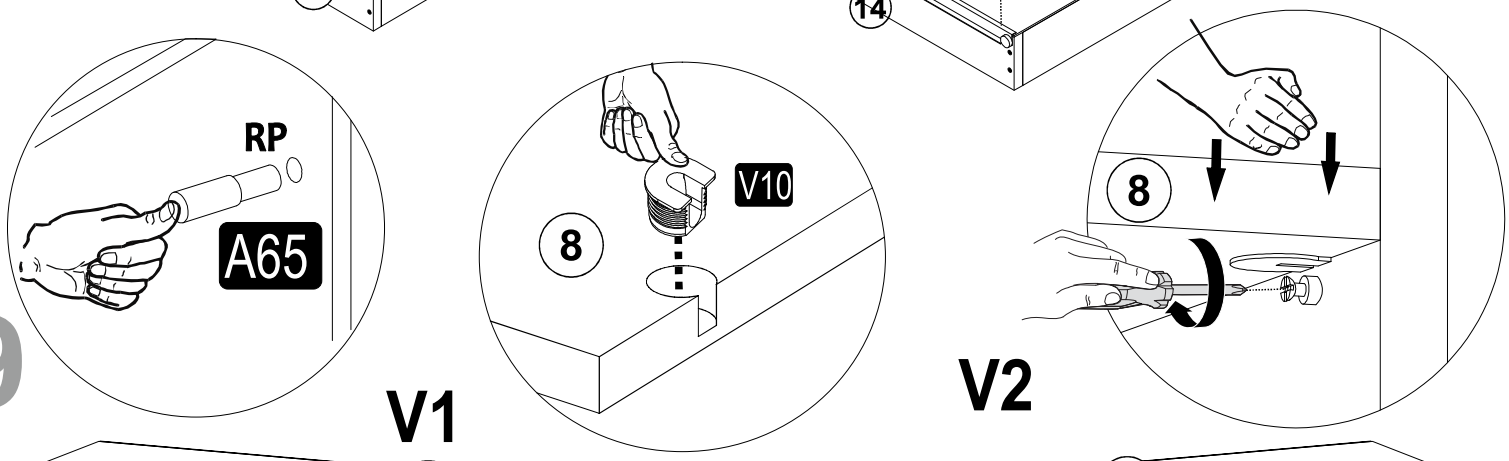
RP
A65
8
V10
8

V1

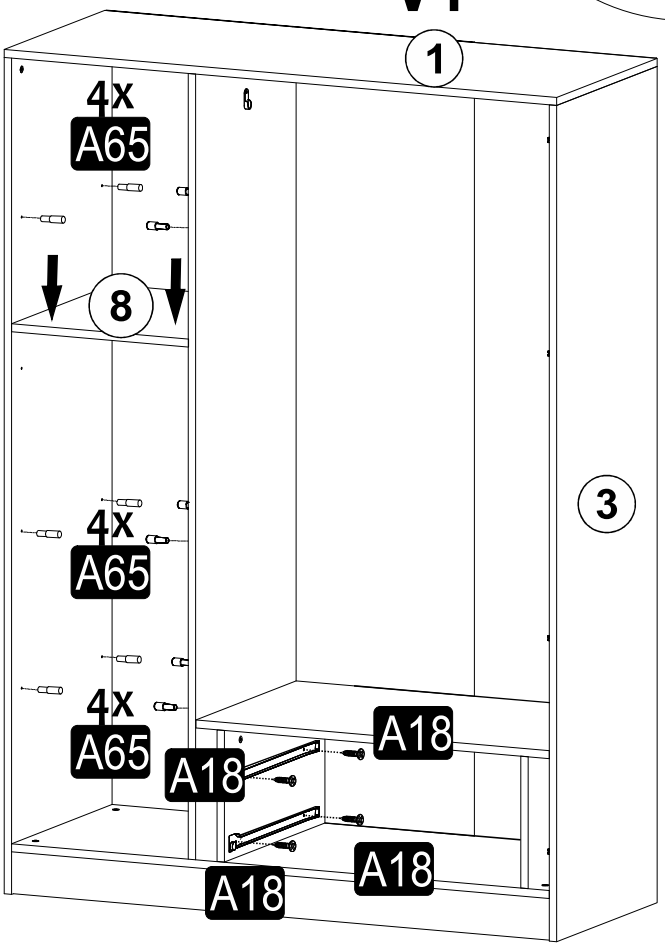
1
4x
A65
8
3
4x
A65
4x
A65
A18
A18
A18
A18

V2

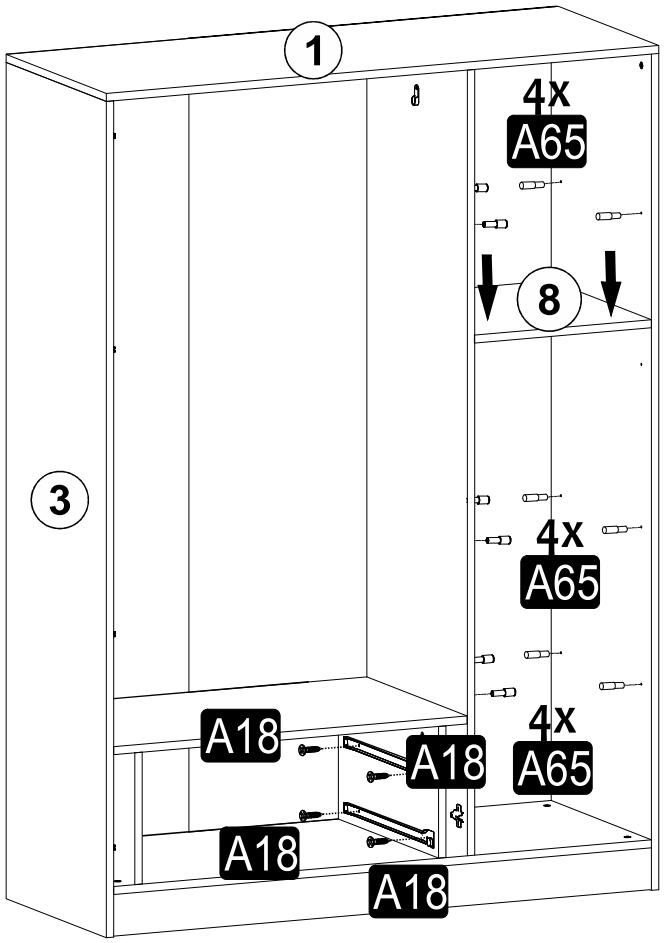
1
4x
A65
8
3
4x
A65
A18
A18
4x
A65
A18
A18

10

V1

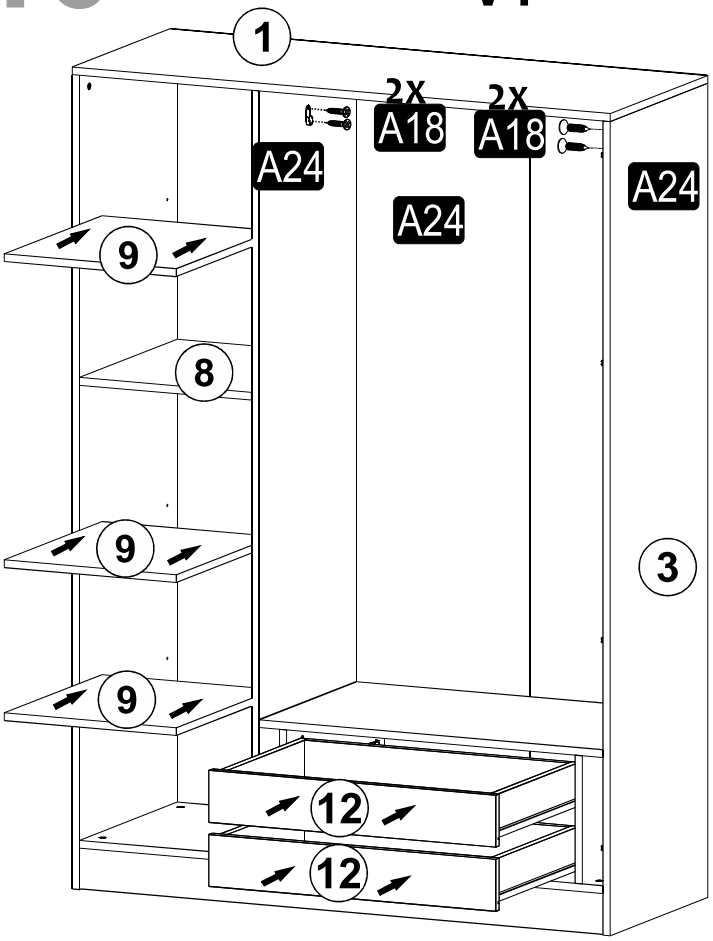
1
2x
A18
2x
A18
A24
A24
A24
9
8
9
3
9
12
12

V2

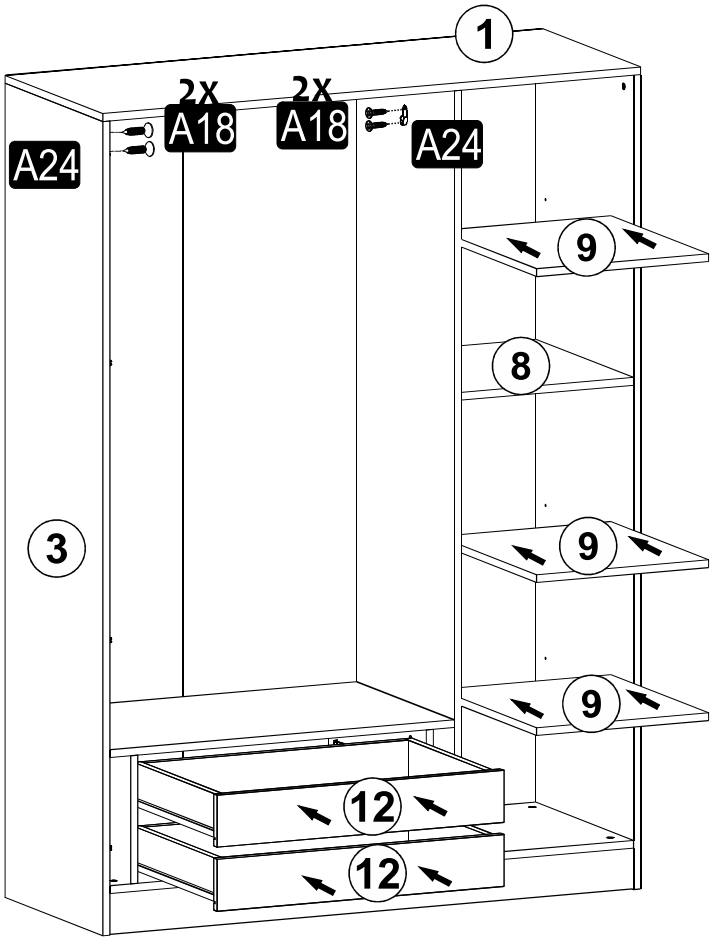
1
2x
A18
2x
A18
A24
A24
9
8
3
9
9
12
12

11

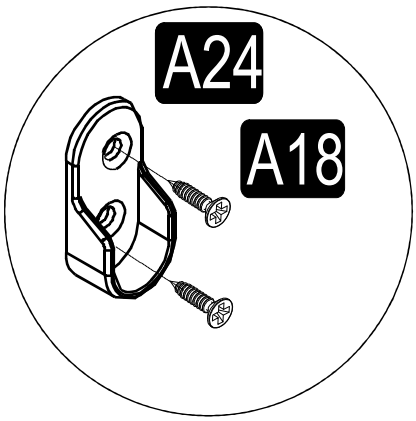
A24
A18

A18
A18
C01
A18
A18
A18
C01
V22
V22
A18
A18
C01
K21
A18
A18

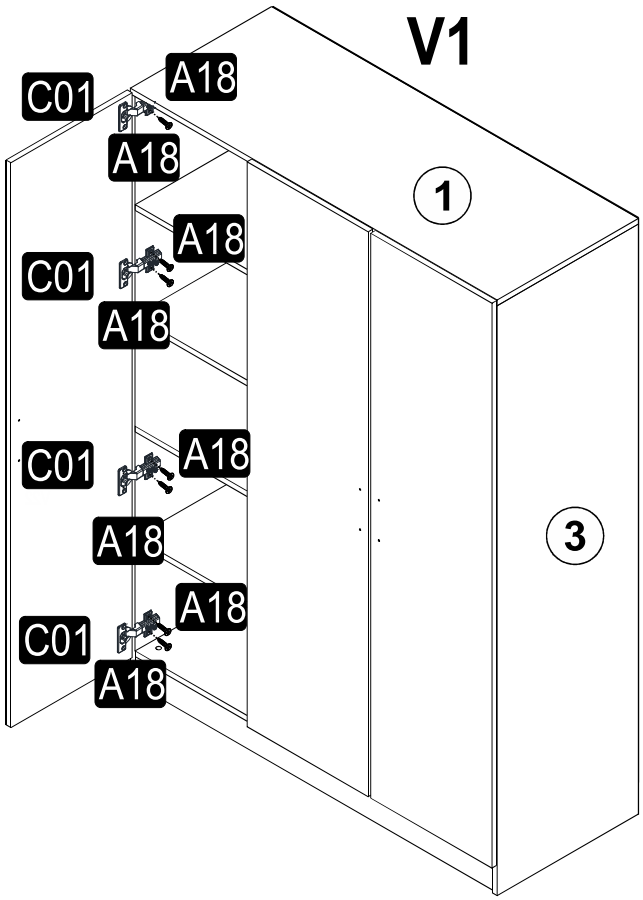
V1
C01
A18
A18
A18
C01
A18
C01
A18
A18
C01
A18
A18
1
3

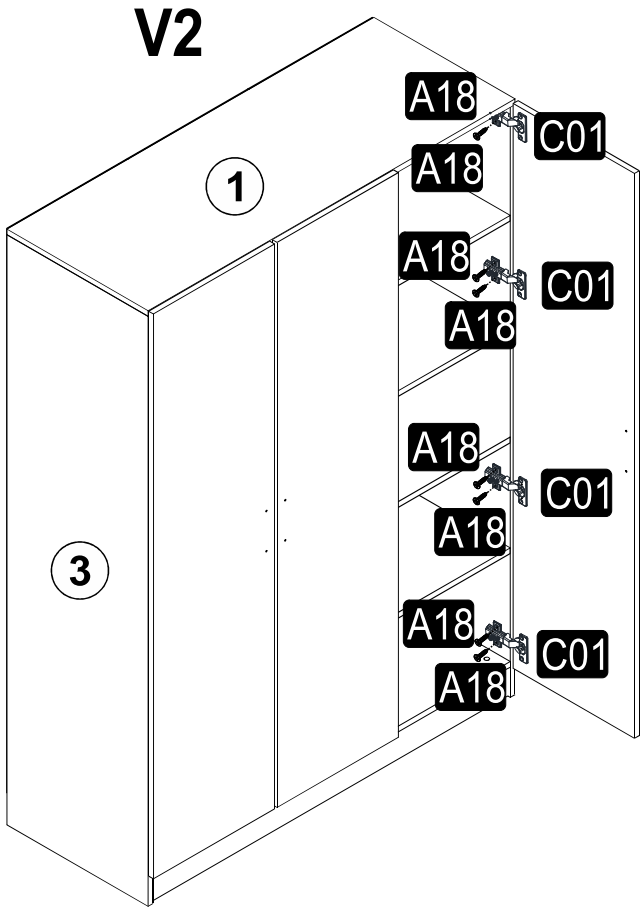
V2
A18
C01
A18
A18
C01
A18
A18
C01
A18
A18
C01
A18
1
3

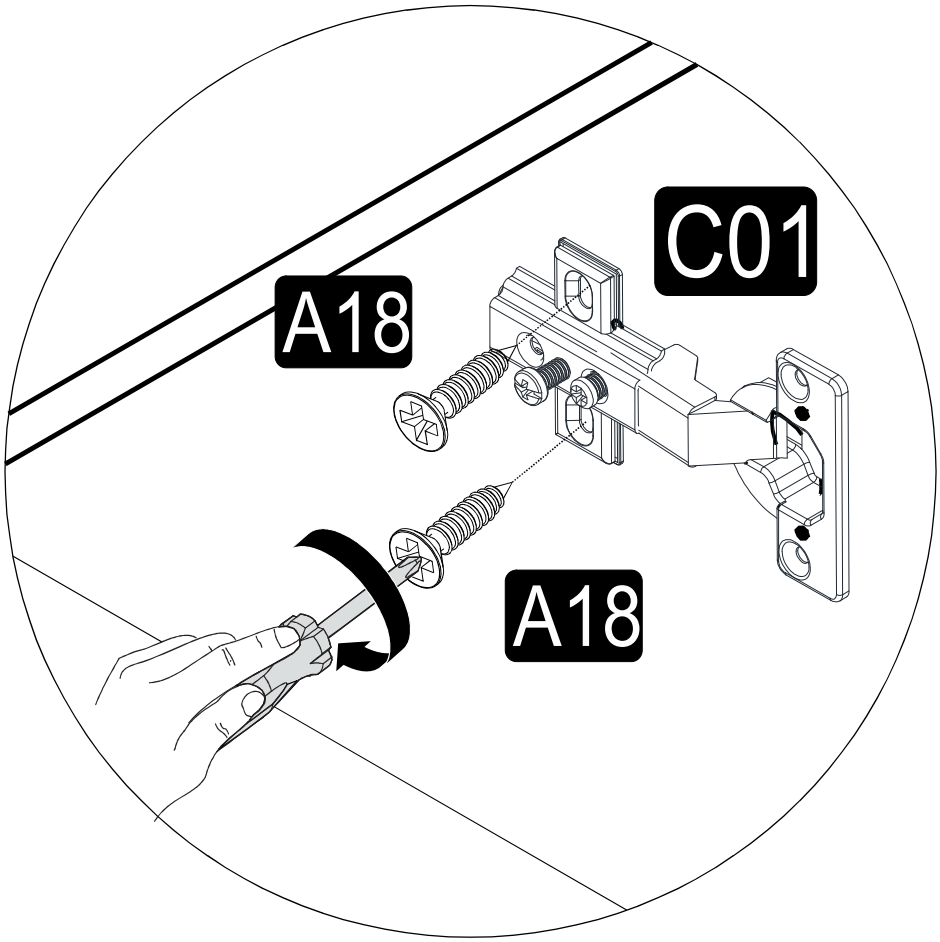
C01
A18
A18